REV	DESCRIPTION	DATE	APPROVED

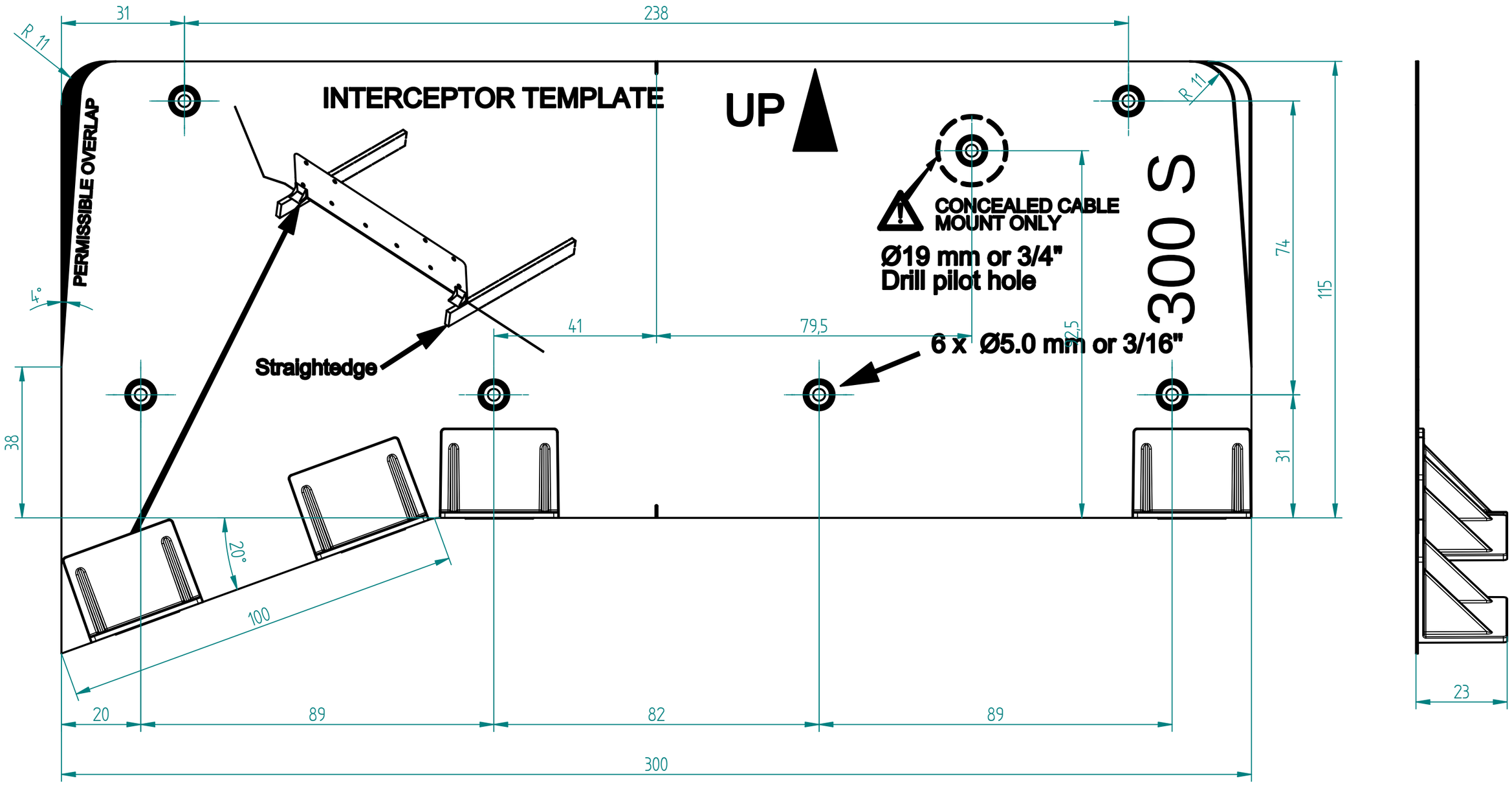

www.zipwake.com

ALL DIMENSIONS IN: mm
DIMENSIONS WITHIN BRACKETS: [Inches]

DO NOT SCALE DRAWING

COPYRIGHT 2015. ALL RIGHTS RESERVED BY ZIPWAKE AB. THE INFORMATON CONTAINED IN THIS DRAWING SHALL NOT BE REPRODUCED IN PART OR AS A WHOLE WITHOUT THE PRIOR WRITTEN PERMISSION OF ZIPWAKE AB.

	NAME	DATE
DRAWN	JD	171028
CHECKED		
APPROVED		

UNLESS OTHERWISE SPECIFIED GENERAL TOLERANCES ACCORDING TO ISO 2768-1-m

ZIPWAKE

TITLE: IT300-S CHINE PORT DRILL TEMPLATE

SIZE	DWG. NO.	REV
A3	3015072	R1A

FILE NAME: 3015072_Zipwake_Interceptor_300S_Chine_Port_Drill_Template_R1A.dft

SCALE: 1:1 | WEIGHT: | SHEET 1 OF 1